NETWORKING DIAGRAM

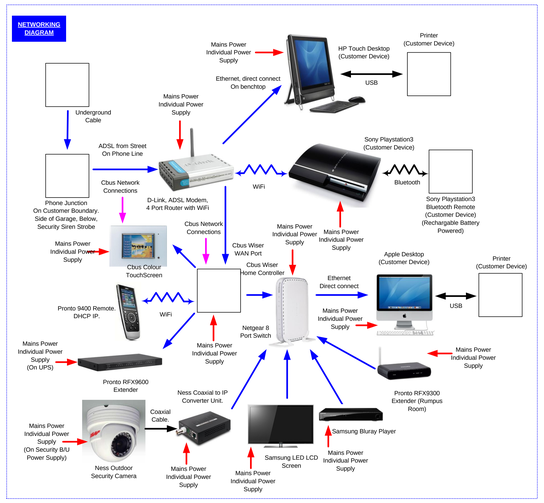

SECURITY DIAGRAM

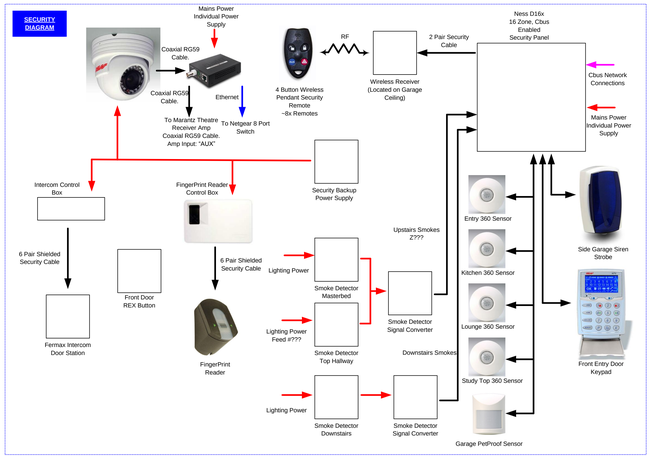

CBUS DIAGRAM

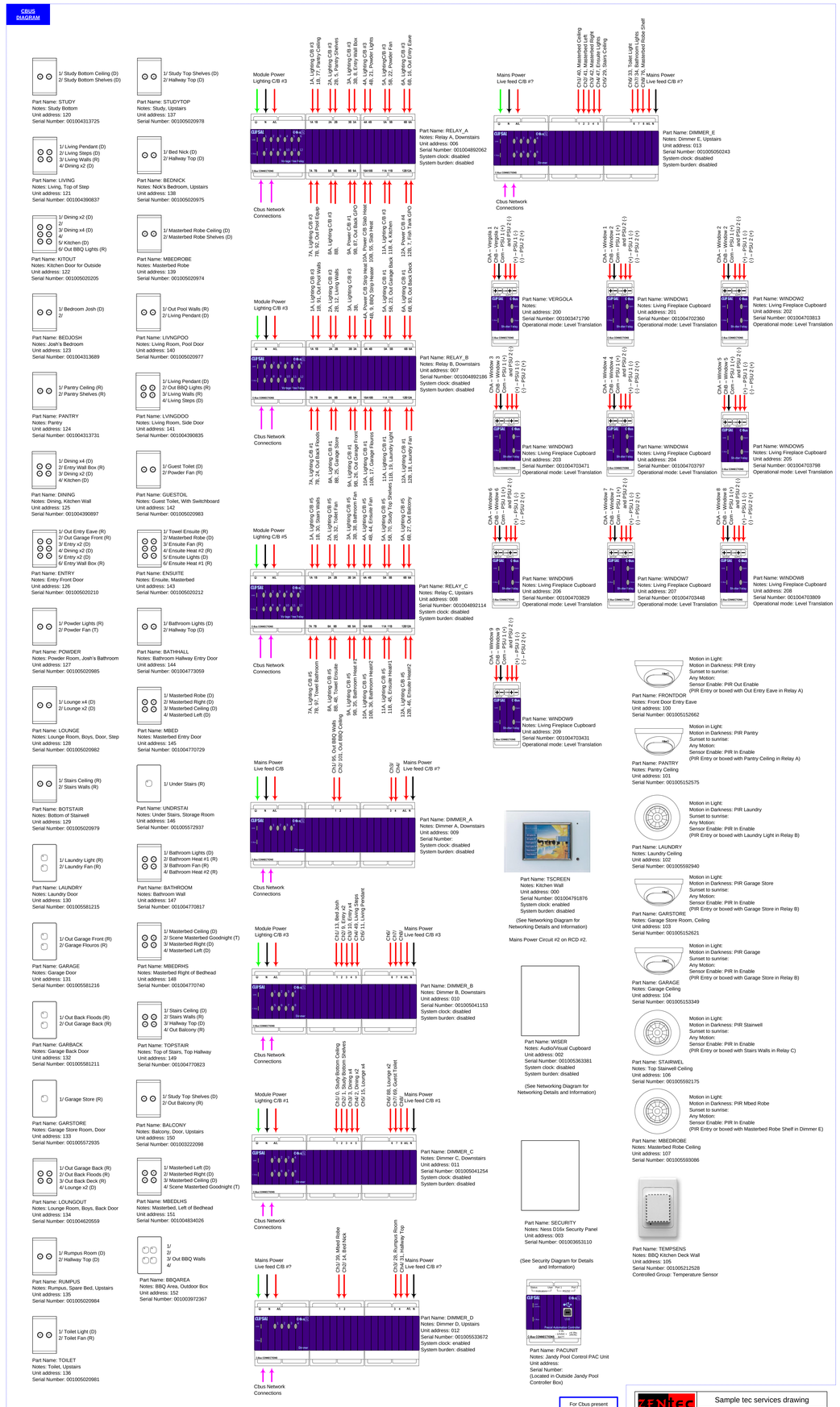

NUVO MULTIROOM AUDIO DIAGRAM

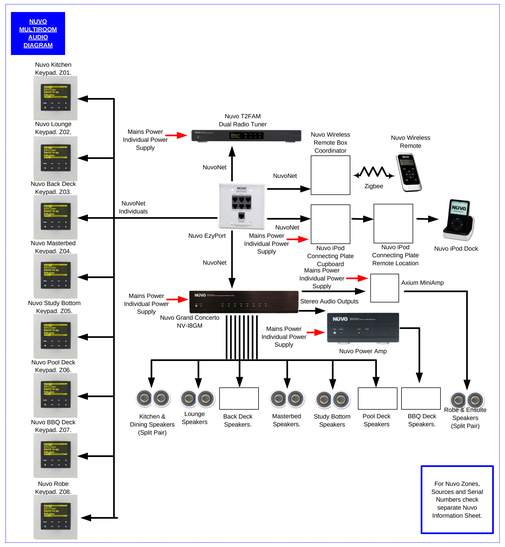

NUVO MULTIROOM AUDIO SOURCE DIAGRAM

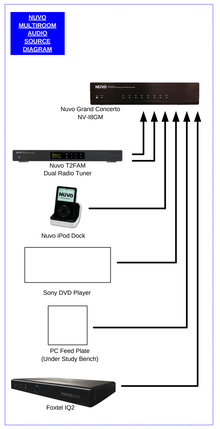

For Nuvo Zones, Sources and Serial Numbers check separate Nuvo Information Sheet.

AV NICKS BED DIAGRAM

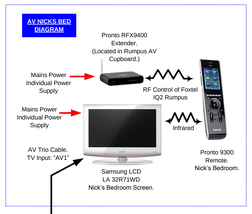

AV RUMPUS DIAGRAM

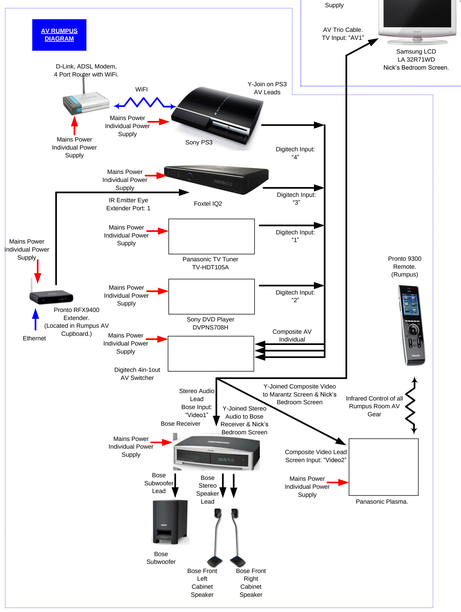

AV CUPBOARD POWER

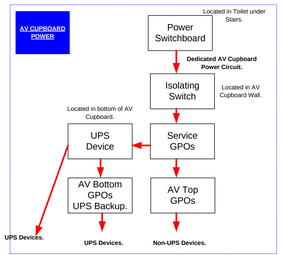

AV THEATRE DIAGRAM

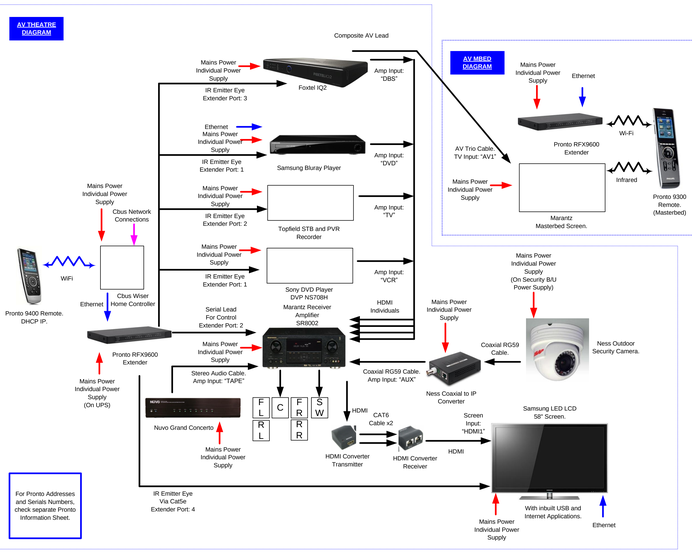

For Pronto Addresses and Serials Numbers, check separate Pronto Information Sheet.

AV MBED DIAGRAM

AV JOSHS BED DIAGRAM

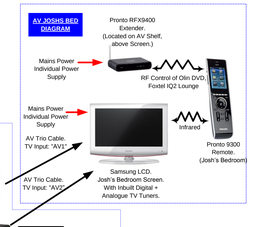

AV LOUNGE DIAGRAM

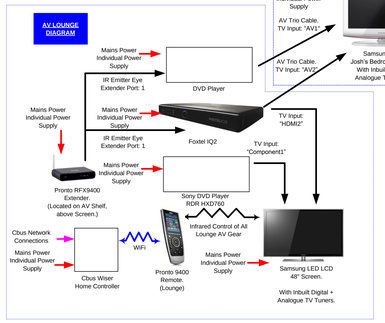

FOXTEL SYSTEMS

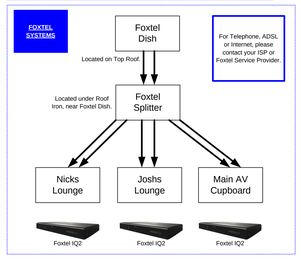

For Telephone, ADSL or Internet, please contact your ISP or Foxtel Service Provider.

PHONE SYSTEMS

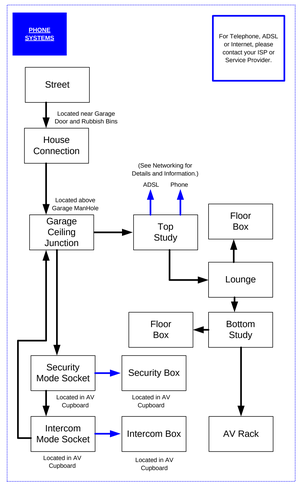

For Telephone, ADSL or Internet, please contact your ISP or Service Provider.

For Cbus present Voltage and specific Cbus Details, check separate Cbus Information Sheet or Cbus Toolkit Computer Program

ZENTEC	Sample tec services drawing		
	Home Automation Diagram		
Ian Corless. Zentec Automation.	SIZE A0	DWG NO	REV A
April 2011.	SCALE		SHEET